AQA

Please write clearly in block capitals.

Centre number | | | | | | Candidate number | | | | |

Surname _____

Forename(s) _____

Candidate signature _____
I declare this is my own work.

GCSE
BIOLOGY

H

Higher Tier Paper 2H

Friday 9 June 2023 Afternoon Time allowed: 1 hour 45 minutes

Materials
For this paper you must have:
- a ruler
- a scientific calculator.

Instructions
- Use black ink or black ball-point pen.
- Pencil should only be used for drawing.
- Fill in the boxes at the top of this page.
- Answer **all** questions in the spaces provided.
- If you need extra space for your answer(s), use the lined pages at the end of this book. Write the question number against your answer(s).
- Do all rough work in this book. Cross through any work you do not want to be marked.
- In all calculations, show clearly how you work out your answer.

Information
- The maximum mark for this paper is 100.
- The marks for questions are shown in brackets.
- You are expected to use a calculator where appropriate.
- You are reminded of the need for good English and clear presentation in your answers.

For Examiner's Use	
Question	Mark
1	
2	
3	
4	
5	
6	
7	
8	
9	
TOTAL	

Do not write outside the box

There are no questions printed on this page

DO NOT WRITE ON THIS PAGE
ANSWER IN THE SPACES PROVIDED

Do not write outside the box

Answer **all** questions in the spaces provided.

0 1 Many different species can live together in the same habitat.

0 1 . 1 What name is given to all of the organisms living in the same habitat?

[1 mark]

Tick (✓) **one** box.

A community ☐

A food chain ☐

A population ☐

An ecosystem ☐

Question 1 continues on the next page

Do not write outside the box

Figure 1 shows four species of bird from the same habitat in the UK.

Figure 1

Brambling (*Fringilla montifringilla*)

Bullfinch (*Pyrrhula pyrrhula*)

Chaffinch (*Fringilla coelebs*)

Goldfinch (*Carduelis carduelis*)

Do not write outside the box

0 1 . 2 Which species of bird in **Figure 1** do scientists think are most closely related?

[1 mark]

Tick (✓) **one** box.

- Brambling and chaffinch ☐
- Brambling and goldfinch ☐
- Bullfinch and chaffinch ☐
- Bullfinch and goldfinch ☐

0 1 . 3 Scientists think the brambling and the bullfinch belong to different species.

What evidence is used by scientists to classify the brambling and the bullfinch as different species?

[1 mark]

Tick (✓) **one** box.

- The brambling and the bullfinch are different sizes. ☐
- The brambling and the bullfinch cannot breed together to give fertile offspring. ☐
- The brambling and the bullfinch live in different parts of the habitat. ☐
- The brambling eats mainly seeds and the bullfinch eats mainly insects. ☐

Question 1 continues on the next page

Do not write outside the box

Four other species of bird (**A**, **B**, **C** and **D**) live in a habitat in the UK.

Figure 2 shows how the numbers of each species of bird varied during one year.

Figure 2

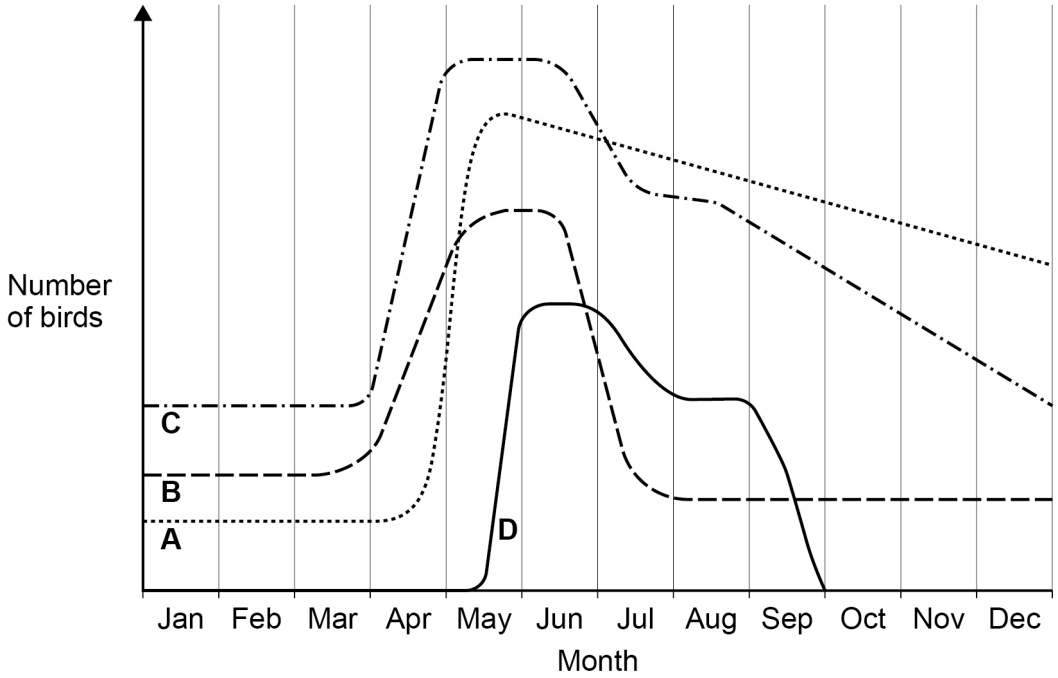

Use information from **Figure 2** to answer Questions **01.4** to **01.6**

0 1 . 4 Describe what happens to the number of birds of species **A** during the year.

[3 marks]

Do not write outside the box

0 1 . 5 In June and July, a disease affected the populations of some of the species.

Which species had the **lowest** resistance to the disease?

[1 mark]

Tick (✓) **one** box.

A ☐ **B** ☐ **C** ☐ **D** ☐

0 1 . 6 One species migrates between the UK and other countries.

Which species migrates between the UK and other countries?

Give a reason for your answer.

[1 mark]

Species _____

Reason _____

_____

_____

8

Turn over for the next question

Do not write outside the box

0 2 A person's eyes can focus on objects at different distances.

A person looks at a distant object.

The person then looks at a near object.

The person's eyes make adjustments so that the near object forms a clear image.

0 2 . 1 Which term describes the adjustment of focus from the distant object to the near object?

[1 mark]

Tick (✓) **one** box.

Accommodation ☐

Adaptation ☐

Hyperopia ☐

Myopia ☐

Figure 3 shows the eye.

Figure 3

.

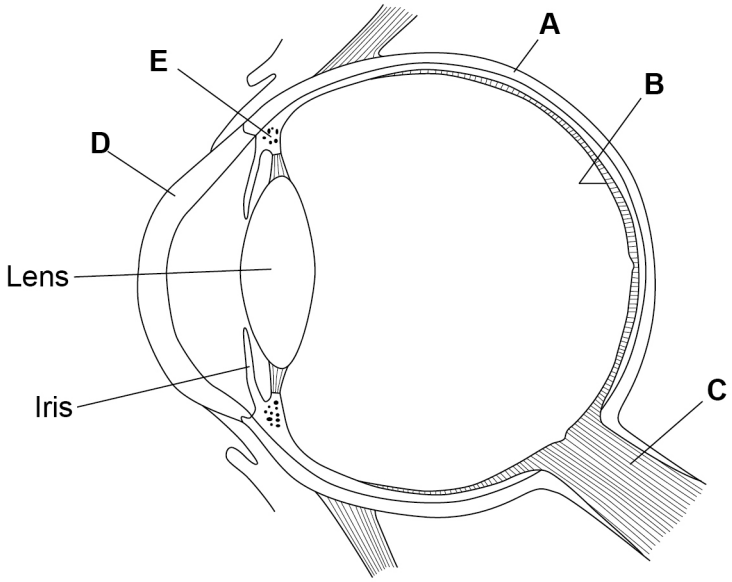

Do not write outside the box

0 2 . 2 Which structure in **Figure 3** is where the image is focused?

[1 mark]

Tick (✓) **one** box.

A ☐ **B** ☐ **C** ☐ **D** ☐ **E** ☐

0 2 . 3 Which structure in **Figure 3** is a muscle that contracts when focusing on a near object?

[1 mark]

Tick (✓) **one** box.

A ☐ **B** ☐ **C** ☐ **D** ☐ **E** ☐

0 2 . 4 What happens to the shape of the lens when focusing on a near object?

[1 mark]

_____

_____

0 2 . 5 The eyes can function in dimly-lit areas and in brightly-lit areas.

The iris contains muscles.

Describe how muscles in the iris help the person to see clearly when moving from a dimly-lit area to a brightly-lit area.

[2 marks]

_____

_____

_____

_____

Do not write outside the box

0 2 . 6 It is important to be able to react quickly.

Many people think that drinking coffee decreases reaction time.

Plan an investigation to test the effect of drinking coffee on reaction time.

You should include:

- the test for reaction time that you would use
- how to make the investigation valid.

[4 marks]

10

Do not write outside the box

Turn over for the next question

DO NOT WRITE ON THIS PAGE
ANSWER IN THE SPACES PROVIDED

Do not write outside the box

0 3 Reproduction can produce offspring which are:

- genetically different

  or

- genetically identical.

Farmers grow tomato plants in greenhouses.

The tomatoes are sold in supermarkets.

0 3 . 1 Suggest **one** advantage of growing tomato plants that are genetically different.

[1 mark]

_____

_____

0 3 . 2 Suggest **one** advantage of growing tomato plants that are genetically identical.

[1 mark]

_____

_____

0 3 . 3 Scientists can grow genetically identical tomato plants using tissue culture.

What is tissue culture?

[1 mark]

_____

_____

0 3 . 4 Genetically identical tomato plants growing in the same garden do **not** all grow to the same height.

Give **one** reason why.

[1 mark]

_____

_____

Do not write outside the box

The sex of dogs is determined by **X** and **Y** chromosomes in the same way as in humans.

0 3 . 5 Complete the Punnett square diagram in **Figure 4** to show the inheritance of sex in dogs.

Use the symbols **X** and **Y**.

[3 marks]

Figure 4

Female

Male

0 3 . 6 A female dog gave birth to six offspring.

Why would you expect there to be three male offspring and three female offspring?

Use your answer to Question **03.5**.

[1 mark]

_____

_____

Question 3 continues on the next page

Do not write outside the box

Farmers keep chickens for:

- meat production
- egg production.

Some varieties of chicken grow more quickly and are more suitable for meat production.

Other varieties of chicken produce more eggs.

A farmer keeps two varieties of chicken, **A** and **B**.

The farmer investigated the growth rates and egg-production rates of both varieties.

Figure 5 shows the results.

Figure 5

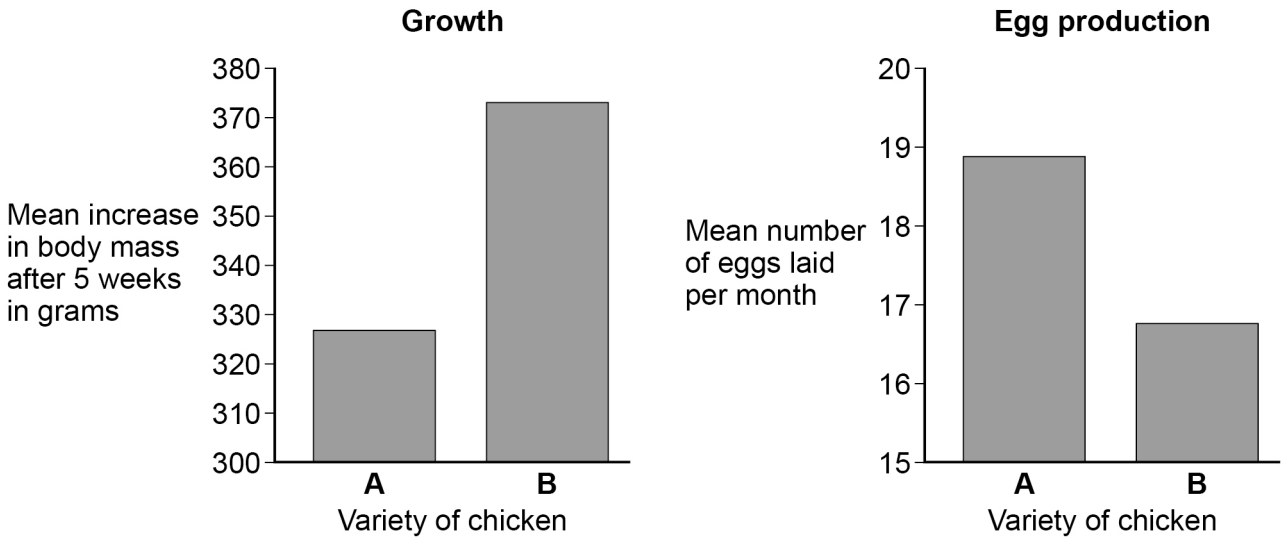

0 3 . 7 Suggest **two** control variables the farmer should have used in this investigation.

[2 marks]

1 _____

_____

2 _____

_____

Do not write outside the box

0 3 . 8 **Figure 5** shows mean values from 500 chickens of each variety.

Give the reason the farmer used a large number of chickens.

[1 mark]

0 3 . 9 The farmer wants to produce a new variety of chicken that is good for **both** meat production **and** egg production.

Describe how selective breeding of chicken varieties **A** and **B** can produce the new variety of chicken.

[4 marks]

15

Turn over for the next question

Do not write outside the box

There are no questions printed on this page

DO NOT WRITE ON THIS PAGE
ANSWER IN THE SPACES PROVIDED

Do not write outside the box

0 4 Organic substances decay into simpler substances.

0 4 . 1 The leaves fall off many trees in autumn.

The dead leaves contain carbon compounds and nitrogen compounds.

Describe how carbon **and** nitrogen in compounds in the leaves are recycled and used by living trees.

You should include a description of:

- how the leaves are broken down
- how substances are taken in and used by the trees.

[6 marks]

Question 4 continues on the next page

Do not write outside the box

Students investigated the effect of temperature on the decay of milk.

This is the method used.

1. Place 25 cm^3 of fresh milk into each of three beakers.
2. Keep one beaker of milk at 5 °C.
3. Keep one beaker of milk at 15 °C.
4. Keep one beaker of milk at 25 °C.
5. Record the pH of the milk in each beaker every day for 4 days.

Table 1 shows the results.

Table 1

Time in days	**pH of milk**		
	5 °C	**15 °C**	**25 °C**
0	6.8	6.8	6.8
1	6.5	6.1	5.3
2	6.2	5.5	4.9
3	5.9	5.1	4.8
4	5.6	4.8	4.8

0 4 . 2 Suggest **one** improvement the students could have made to the method.

[1 mark]

_____

_____

Do not write outside the box

Figure 6 shows the results at 5 °C and at 15 °C.

Figure 6

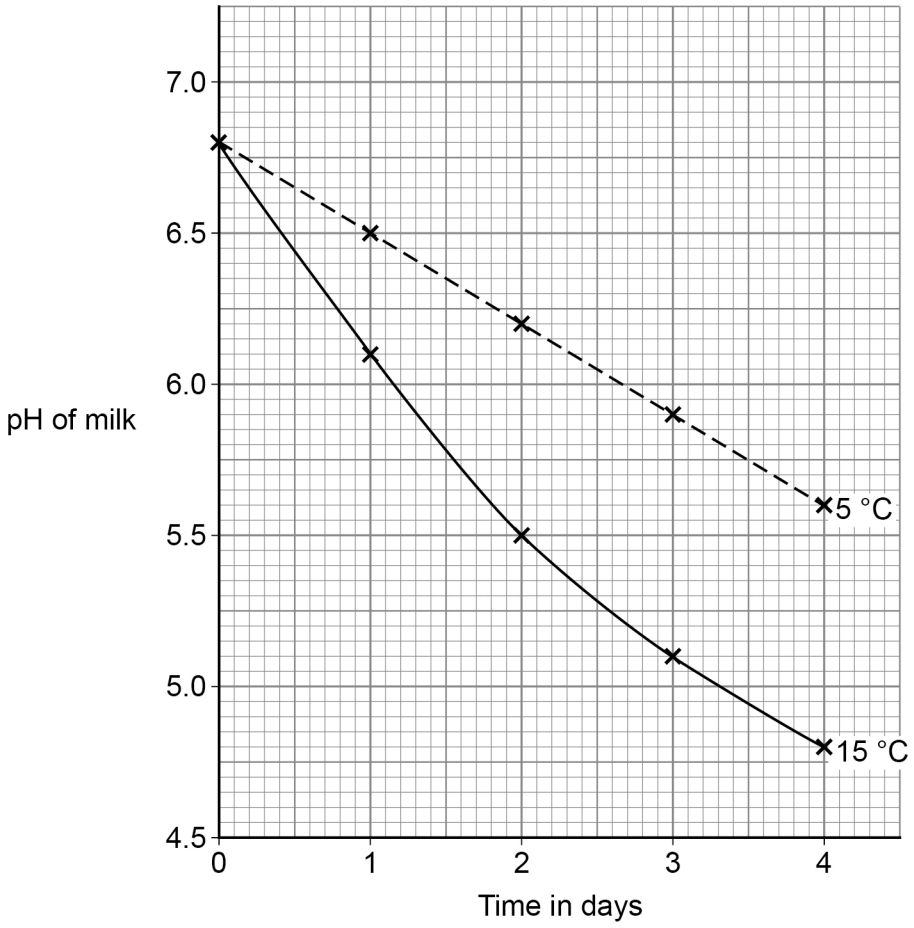

0 4 . 3 Complete **Figure 6**.

You should:

- plot the data for 25 °C from **Table 1**
- draw a line of best fit.

[3 marks]

Question 4 continues on the next page

Do not write outside the box

Figure 7 shows the results for 5 °C and at 15 °C again.

Figure 7

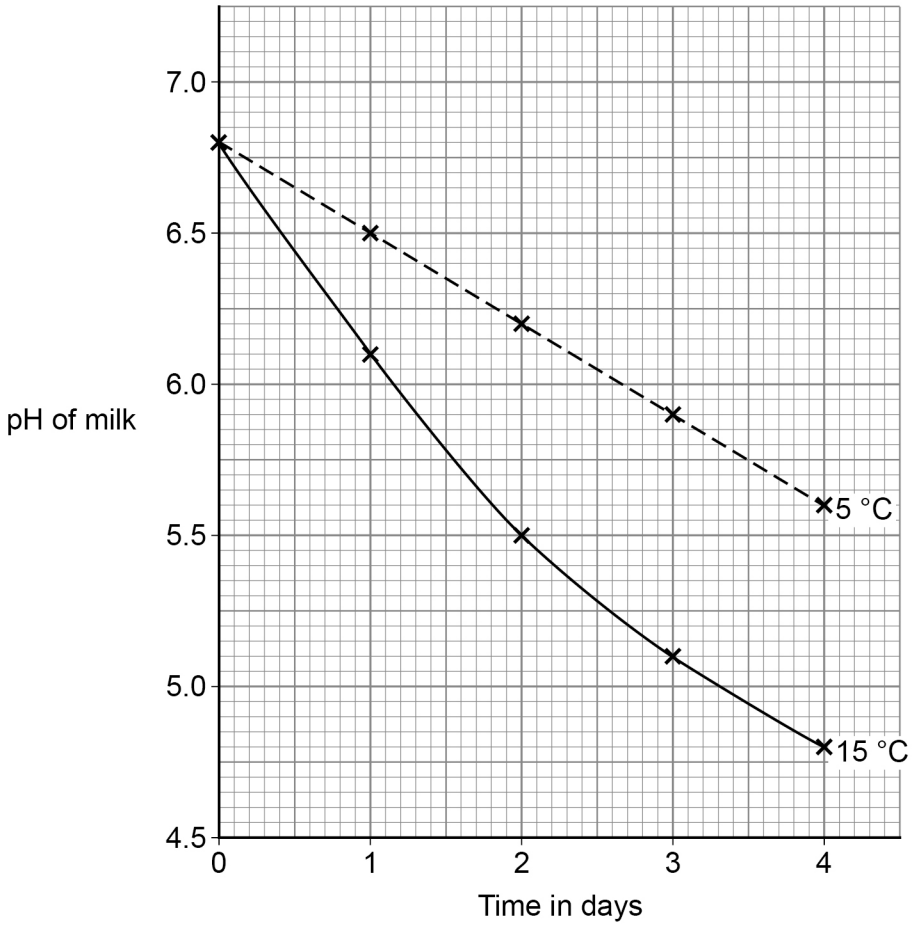

Do not write outside the box

0 4 . 4 The rate of pH change increases with an increase in temperature.

The rate of pH change at 5 °C is 0.3 pH units per day.

Calculate how many times faster the rate of pH change is at 15 °C than the rate of pH change at 5 °C, at **day 2**.

You should draw a tangent on **Figure 7**.

[4 marks]

Rate at 15 °C is _____ times faster.

0 4 . 5 Milk contains lipids.

The lipids are broken down when the milk decays.

Explain why the pH changes more quickly when the temperature is higher.

[3 marks]

17

Turn over for the next question

Do not write outside the box

0 5 Homeostasis is the regulation of the body's internal conditions.

Many internal conditions are controlled by hormones.

Homeostasis works by negative feedback control.

0 5 . 1 **Figure 8** shows how the concentration of substance **Q** in the blood is controlled by negative feedback.

Figure 8

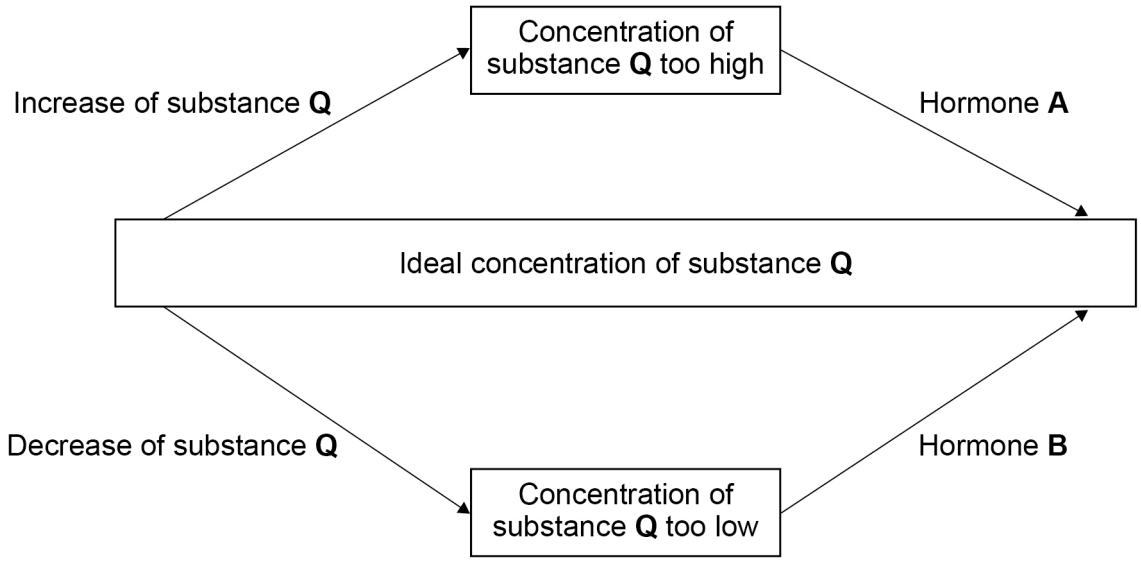

Explain how the concentration of substance **Q** in the blood is controlled by negative feedback.

Use information from **Figure 8**.

[3 marks]

Do not write outside the box

0 5 . 2 Thyroxine is a hormone produced by the thyroid gland.

A decrease in body temperature causes an increase in thyroxine production.

Explain how the production of thyroxine causes an **increase** in body temperature.

[2 marks]

Question 5 continues on the next page

Do not write outside the box

0 5 . 3 ADH is a hormone made by the pituitary gland.

ADH controls how much water is reabsorbed from the kidney tubules.

Table 2 shows effects of ADH.

Table 2

Concentration of ADH in the blood in nanograms/dm^3	Concentration of dissolved substances in urine in arbitrary units	Rate of urine production in cm^3/minute
0.0	50	20.0
1.25	700	8.8
2.50	980	3.9
3.75	1110	1.8
5.00	1170	0.9

The concentration of ADH in a man's blood was 3.75 nanograms/dm^3.

The concentration of ADH in his blood decreased to 1.25 nanograms/dm^3.

Explain how the decrease in the concentration of ADH would cause the changes to the urine shown in **Table 2**.

[4 marks]

9

Do not write outside the box

Turn over for the next question

DO NOT WRITE ON THIS PAGE
ANSWER IN THE SPACES PROVIDED

Do not write outside the box

0 6 This question is about the effects of deforestation and agriculture.

The processes of photosynthesis and respiration affect the carbon dioxide concentration in the air.

Figure 9 shows the changes in the carbon dioxide concentration in the air in a tropical rainforest during one day.

The data are mean daily values over a whole year.

Figure 9

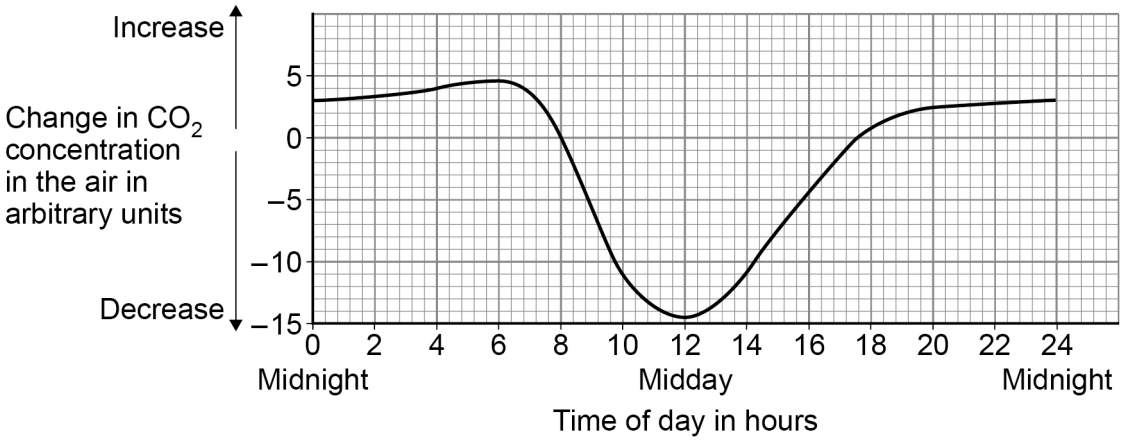

0 6 . 1 Explain what causes the changes in the carbon dioxide concentration in the air:

- from 0 to 6 hours
- from 8 to 12 hours.

Use information from **Figure 9**.

[4 marks]

0 to 6 hours _____

_____

_____

_____

8 to 12 hours _____

_____

_____

_____

Do not write outside the box

0 6 . 2 An area of rainforest is cut down and replaced with a field of maize plants.

Only one crop of maize is grown each year.

Figure 10 shows the changes in the carbon dioxide concentration in the air in the field of maize during one day.

The data are mean daily values over the 6-month growing period.

Figure 10

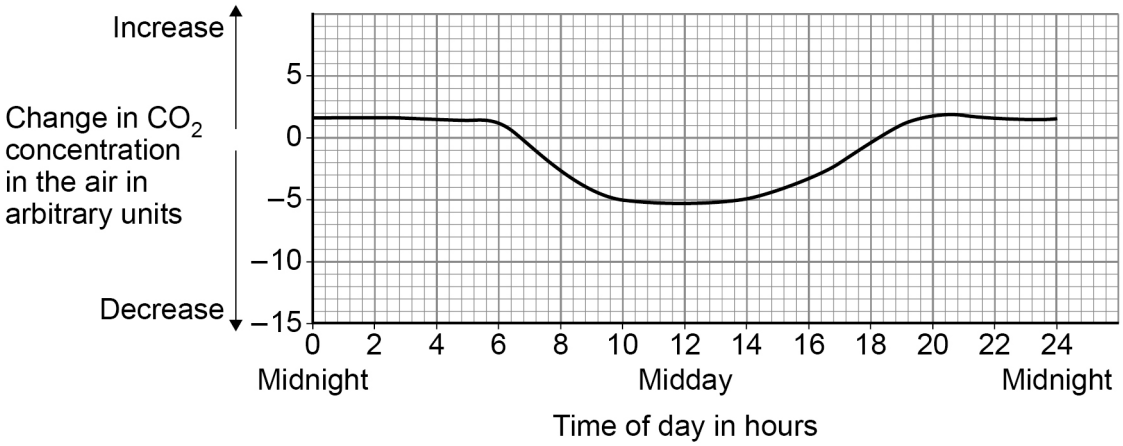

The maize grows for only 6 months of the year.

Explain why replacing rainforest with maize will increase the carbon dioxide concentration in the air after one year.

Use information from **Figure 9** and **Figure 10**.

[2 marks]

Question 6 continues on the next page

Do not write outside the box

A tropical rainforest can contain over 1000 different tree species.

Large areas of tropical rainforest have been cut down during the last 100 years so crops can be grown.

Scientists studied the regeneration of different areas of tropical rainforest.

The scientists:

- investigated areas of rainforest that had been cut down at different times during the previous 100 years
- recorded the number of tree species that re-grew in each area
- compared each area with a control area next to it. The control areas were undisturbed rainforest which had never been cut down.

Figure 11 shows the scientists' results.

Figure 11

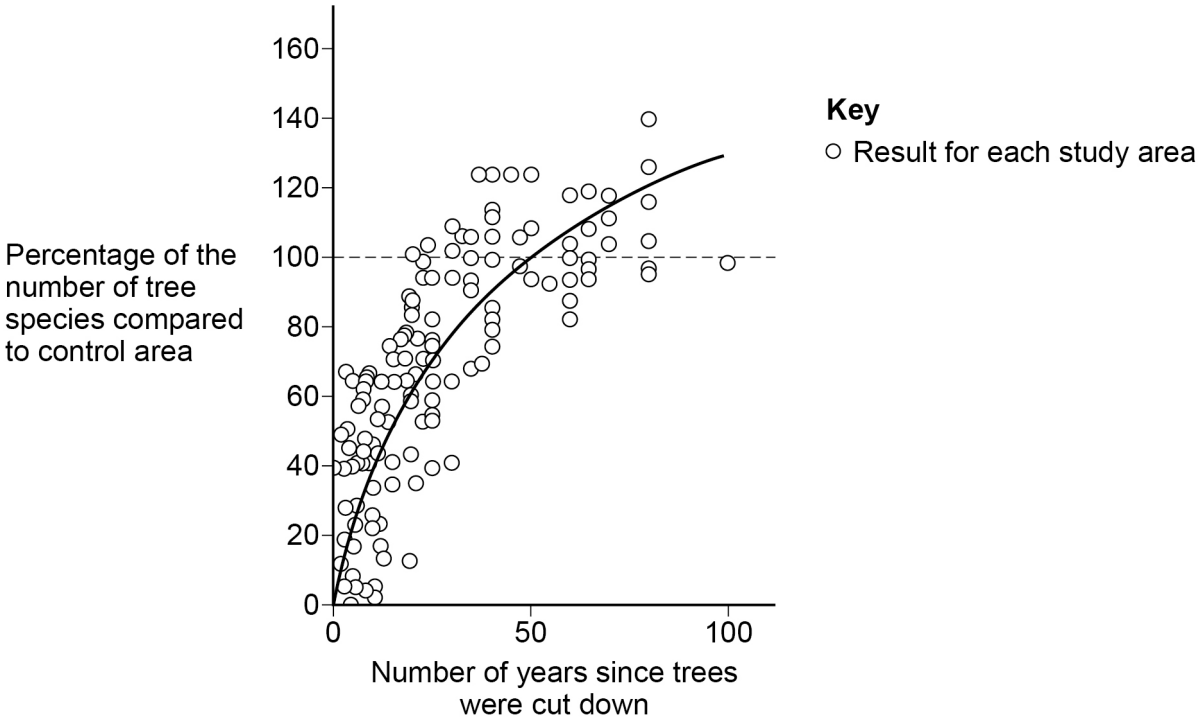

Do not write outside the box

0 6 . 3 The values plotted in **Figure 11** are percentages of the results for the control areas.

Explain why the scientists presented their results as **percentages**.

[2 marks]

During the 100 years, the biodiversity of trees in the regenerating rainforest increases.

0 6 . 4 Give **one** other conclusion you can make from **Figure 11**.

[1 mark]

0 6 . 5 Give **two** reasons why an increase in the diversity of trees in the rainforest leads to an increase in animal diversity.

[2 marks]

1

2

11

Turn over for the next question

Do not write outside the box

0 7 Hormones are important for regulating the menstrual cycle.

During the menstrual cycle, eggs mature inside follicles in the ovaries.

A 27-year-old woman was infertile.

A doctor tested a sample of the woman's blood.

The test did **not** detect any follicle stimulating hormone (FSH) in the woman's blood.

The doctor gave the woman daily injections of FSH for 7 days.

The doctor measured:

- the concentration of FSH in the woman's blood
- the concentration of oestrogen in the woman's blood
- the volumes of developing follicles in the ovaries.

Figure 12 shows the results.

Figure 12

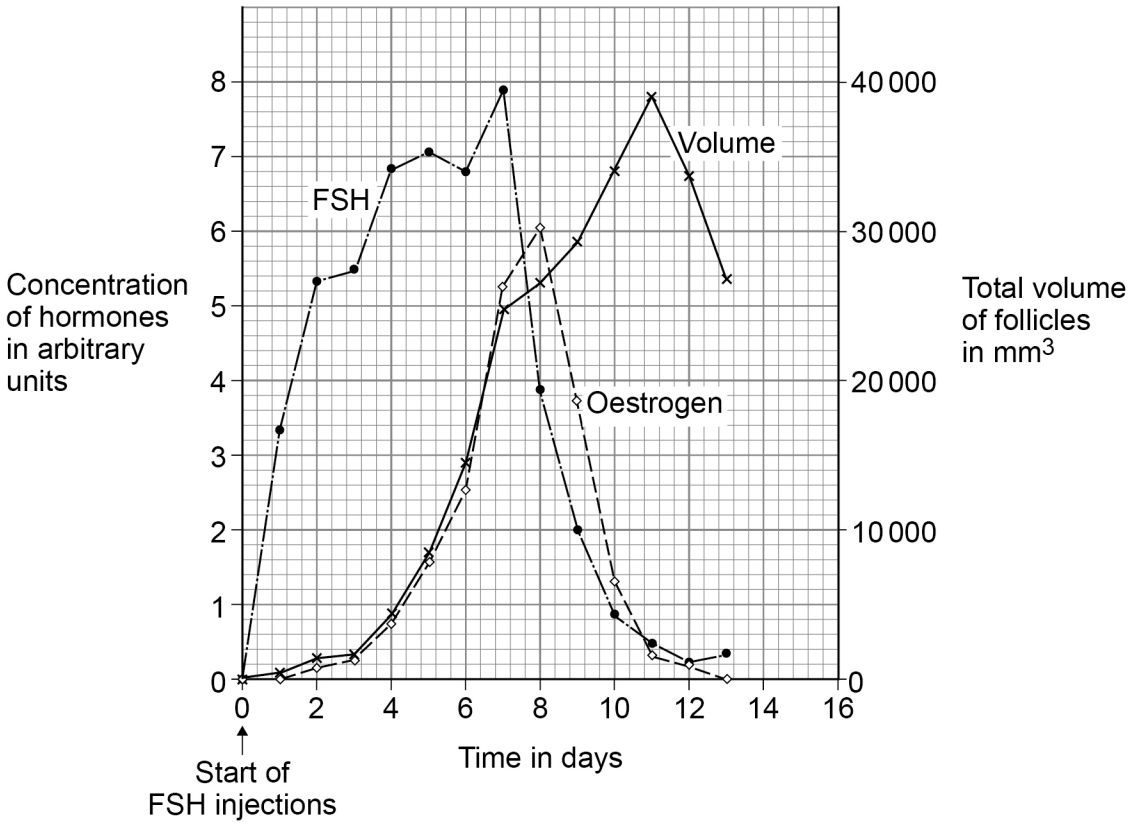

Do not write outside the box

0 7 . 1 Give evidence from **Figure 12** that the follicles in the ovaries release oestrogen.

[1 mark]

0 7 . 2 Injection of FSH caused the development of a number of follicles.

The mean diameter of the follicles on day 11 was 22 millimetres.

Calculate the number of follicles in the woman's ovaries on day 11.

Assume each follicle is a sphere.

Volume of a sphere = $\frac{4}{3}\pi r^3$

r = radius

π = 3.14

Give your answer to the nearest whole number.

[5 marks]

Number of follicles (to the nearest whole number) = _____

Question 7 continues on the next page

Do not write outside the box

0 7 . 3 Before treatment with FSH, the woman had underdeveloped breasts.

Explain why the lack of FSH in the woman's blood caused underdeveloped breasts.

[2 marks]

_____

_____

_____

_____

0 7 . 4 Usually males and females both produce FSH.

The woman had inherited a faulty gene for FSH production from each of her parents.

The woman's parents both produce FSH.

Show how the **woman's parents** could have a child that does **not** produce FSH.

You should:

- draw a Punnett square diagram
- identify the phenotype of each offspring genotype
- use the symbols below:

  H = allele for making FSH

  h = allele for **not** making FSH

[3 marks]

Do not write outside the box

0 7 . 5 The woman continues to have injections of FSH.

The woman has a child with a man who is heterozygous for the FSH gene.

Explain why the probability that the child will be able to produce FSH is 0.5.

[3 marks]

_____

_____

_____

_____

_____

_____

14

Turn over for the next question

Do not write outside the box

0 8 **Figure 13** shows six stages in the process of meiosis.

Figure 13

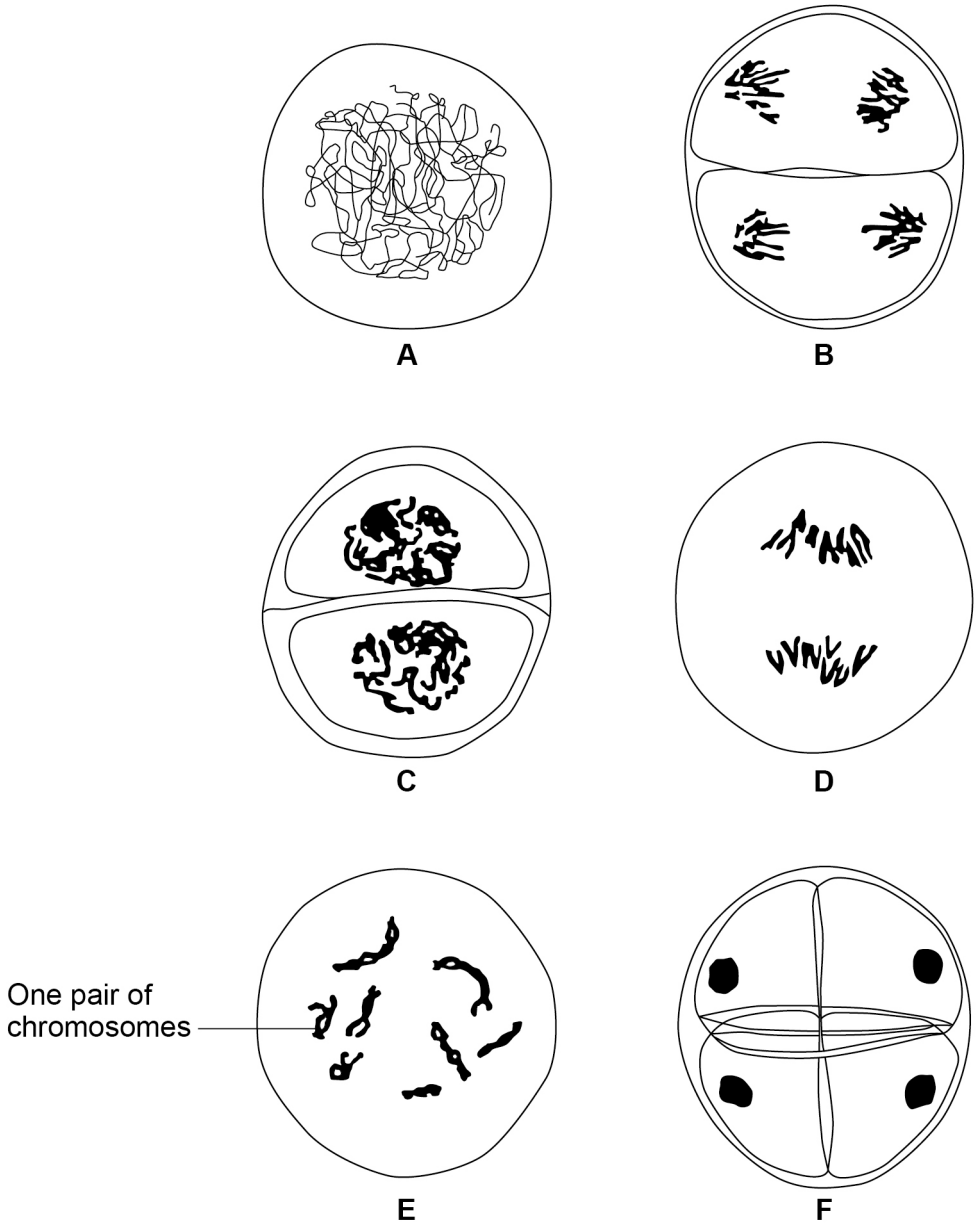

0 8 . 1 In **Figure 13**, **A** is the first stage and **F** is the final stage.

Stages **B** to **E** are **not** in the correct order.

Give the correct order of stages **A** to **F**.

[1 mark]

A → _____ → _____ → _____ → _____ → **F**

Do not write outside the box

At the end of meiosis the number of chromosomes is different from the number of chromosomes at the start of meiosis.

0 8 . 2 Give the number of chromosomes in **one** cell in **Figure 13**:

- at the start of meiosis
- at the end of meiosis.

[2 marks]

Start _____

End _____

0 8 . 3 Explain why the change in the number of chromosomes is important.

[3 marks]

_____

_____

_____

_____

_____

_____

0 8 . 4 Meiosis produces cells that are genetically different.

Describe how meiosis produces cells that are genetically different.

[2 marks]

_____

_____

_____

_____

Question 8 continues on the next page

Do not write outside the box

Chromosomes contain DNA.

Figure 14 shows part of a DNA molecule.

Figure 14

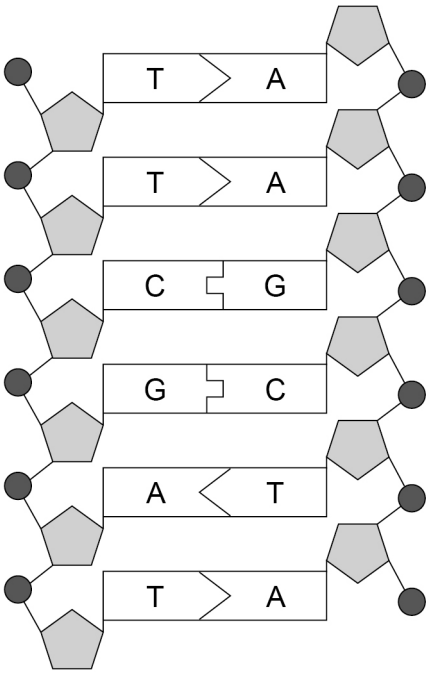

0 8 . 5 What type of substances are labelled **A**, **C**, **G** and **T** in **Figure 14**?

[1 mark]

_____

0 8 . 6 DNA is made of nucleotides.

How many nucleotides are shown in **Figure 14**?

[1 mark]

_____

10

Do not write outside the box

0 9 A wide variety of species exists on Earth.

Most scientists accept Darwin's theory of evolution by natural selection as the explanation for this variety of species.

Explain how our understanding of evolution has developed due to:

- fossil evidence
- increased understanding of the mechanisms of genetics.

[6 marks]

6

END OF QUESTIONS

Do not write outside the box

There are no questions printed on this page

DO NOT WRITE ON THIS PAGE
ANSWER IN THE SPACES PROVIDED

Do not write outside the box

Question number	**Additional page, if required.** **Write the question numbers in the left-hand margin.**

Do not write outside the box

Question number	**Additional page, if required.** **Write the question numbers in the left-hand margin.**

Copyright information

For confidentiality purposes, all acknowledgements of third-party copyright material are published in a separate booklet. This booklet is published after each live examination series and is available for free download from www.aqa.org.uk.

Permission to reproduce all copyright material has been applied for. In some cases, efforts to contact copyright-holders may have been unsuccessful and AQA will be happy to rectify any omissions of acknowledgements. If you have any queries please contact the Copyright Team.

Copyright © 2023 AQA and its licensors. All rights reserved.